3-Axial Automated Bowling Arm

Mrs. Eazhisai Vallabi M.
Assistant Professor
Department of Instrumentation and Control Engineering
Saranathan College of Engineering
Tiruchirappalli, India

Sivapughalventhan V.
UG Student
Department of Instrumentation and Control Engineering
Saranathan College of Engineering
Tiruchirappalli, India

Suhith S.
UG Student
Department of Instrumentation and Control Engineering
Saranathan College of Engineering
Tiruchirappalli, India

Syed Ahamad Raza Saqqaf M.
UG Student
Department of Instrumentation and Control Engineering
Saranathan College of Engineering
Tiruchirappalli, India

Udhayakumar S.
UG Student
Department of Instrumentation and Control Engineering
Saranathan College of Engineering, Tiruchirappalli, India

Abstract

Bowling machines has been used in sports over a long period of time. Primarily bowling machines are used by the batsman to improve their batting technique. At the same time it saves the bowler from overuse injuries like lumbar spine injuries and disk degeneration. The aim of the project is to design a robotic arm that bowls automatically at different adjustable speeds for the cricket practice. The balls are thrown by a robotic arm provided with the gripper. The arm is driven by a dc motor and two servo motors. The entire system is controlled by the microcontroller. The following report shows the entire research criteria to design and develop the robotic bowling arm (both mechanical and electrical).
Keywords: DC Motor, PWM, Microcontroller

I. INTRODUCTION

An automatic bowling arm is a device that works as a net practice bowler, means delivering balls to the batsman. As in cricket, there is a requirement of a person for using a bowling arm. Therefore design an adjustable bowling arm to overcome the requirement. The bowling arm can simulate various types of pace, at different lengths accurately. The bowling arm is which enables a batsman to practice and to work on specific skills through repetitions of the ball being bowled at a certain length, line and speed. In cricket and baseball batsmen need to practice playing different varieties of bowling to be technically perfect for batting. At different times batsman require a bowler for practicing on the net. The batsmen require the bowler to bowl at a particular line and length as per his needs. Sometimes the bowler is able to bowl at that spot, but more than often the bowler may not be able to bowl at that perfect spot because of various reasons. Thus, it can be easily seen that the human body cannot perform the task with the exact accuracy, as required. So, there is a need for an adjustable bowling arm which can bowl perfectly at the perfect line and length.

Another problem which a batsman often faces on the net practice is that the balls bowled to him vary in pace, while a regular pace of bowling is expected. A human cannot bowl at the exact same pace required continuously. This problem is also resolved with the help of the bowling arm. The speed required is set in the bowling arm and now the batsman can face the required speed balls continuously. The main mechanism of working in a mechanical bowling arm consists of two servo motor, gripper and DC motor. The device is mounted on a stand, at such a height as to simulate the delivery of a bowler of average because of various reasons.

II. LITERATURE REVIEW

Three-dimensional vision analysis to measure the release characteristics of elite bowlers in cricket

Alexander - Cricket is a sport played internationally in over 100 countries. Two teams face one another in a match, each taking it in turns to bat and field. In the fielding side, bowlers deliver the ball to the batsman who then responds by hitting the ball away. Batting and bowling are complex and dynamic skills which must be practised at length in training. However, due to the demanding nature of bowling, batsmen can train against a machine to face sufficient numbers of deliveries.

Design and Experimental Analysis of Automatic Bowling Machine

All rights reserved by *www.journal4research.org*

Jitendra Kumar - The term automatic is used because of machine does not require any person to constantly put balls into the machine therefore the need for an extra man to stand along with machine has overcome. In the present case, two high speed DC motors has been used. Two wheels are also brought in use, mounting over the motors. The whole setup placed over a tripod, whose height and angle of projection for bowling can be adjusted manually. The speed of the two motors for driving the wheels can be varied by using a pulse width modulation (PWM) with microcontroller.

A new taxonomic system for the sub-classification of cricket bowling actions

Ferdinands, René E D - **The** mixed bowling action is associated with injuries in the lumbar spine and has been shown to have no performance benefits over other bowling actions. The purpose of this study was to assess the mixed bowling action with reference to a more comprehensive classification system to facilitate the development of more targeted bowling action remediation programs. A total of 70 fast bowlers were tested using a three-dimensional motion analysis system (240 Hz). Kinematic data of the shoulders and pelvis were analysed with respect to a modified set of angle threshold criteria to classify bowling actions.

A. Abbreviations and Acronyms

Define abbreviations and acronyms the first time they are used in the text, even after they have already been defined in the abstract. Abbreviations such as Journal for Research, SI, ac, and dc do not have to be defined. Abbreviations that incorporate periods should not have spaces: write “C.N.R.S.,” not “C. N. R. S.” Do not use abbreviations in the title unless they are unavoidable (for example, “Journal for Research” in the title of this article).

B. Other Recommendations

Use one space after periods and colons. Hyphenate complex modifiers: “zero-field-cooled magnetization.” Avoid dangling participles, such as, “Using (1), the potential was calculated.” [It is not clear who or what used (1).] Write instead, “The potential was calculated by using (1),” or “Using (1), we calculated the potential.”

Use a zero before decimal points: “0.25,” not “.25.” Use “cm^3,” not “cc.” Indicate sample dimensions as “0.1 cm × 0.2 cm,” not “0.1 × 0.2 cm^2.” The abbreviation for “seconds” is “s,” not “sec.” Use “Wb/m^2” or “webers per square meter,” not “webers/m^2.” When expressing a range of values, write “7 to 9” or “7-9,” not “7~9.”

A parenthetical statement at the end of a sentence is punctuated outside of the closing parenthesis (like this). (A parenthetical sentence is punctuated within the parentheses.) In American English, periods and commas are within quotation marks, like “this period.” Other punctuation is “outside”! Avoid contractions; for example, write “do not” instead of “don’t.” The serial comma is preferred: “A, B, and C” instead of “A, B and C.”

If you wish, you may write in the first person singular or plural and use the active voice (“I observed that …” or “We observed that ...” instead of “It was observed that ...”). Remember to check spelling. If your native language is not English, please get a native English-speaking colleague to carefully proofread your paper.

III. DESIGN & METHODOLOGY

A. Electrical Aspect

As per the speed require through the wheels, DC motor is concerned. The basic principle operation of an electrical motor is it always converts electrical energy into the mechanical energy. When a DC supply is connected to the input of a DC motor, there will be mechanical power output at the shaft. The speed control of direct current (DC) motor for various applications is very important. The speed control of a DC motor by pulse width modulation infrared remote control has been discussed by Gung et al. PWM may be used as an efficient DC motor speed control. Controller used TV remote control to send data to ATmega16 microcontroller through the IR receiver. This command controls the L293D driver IC to control the direction and speed of a DC motor Development of advance motor drives increases efficiency and reliability. A DC drives are known for higher efficiency, lower maintenance and higher cost. The DC motor is uses in many industrial applications requiring variable speed and load characteristics due to its ease of controllability.

B. Principle of Operation of DC Motor

Consider a coil in a magnetic field of flux density B. When the two ends of the coil are connected across a DC voltage source, current I flow through it. A force is exerted on the coil as a result of the interaction of magnetic field and electric current. The force on the two sides of the coil is such that the coil starts to move in the direction of force.

All rights reserved by *www.journal4research.org*

Fig. 1:

IV. BLOCK DIAGRAM

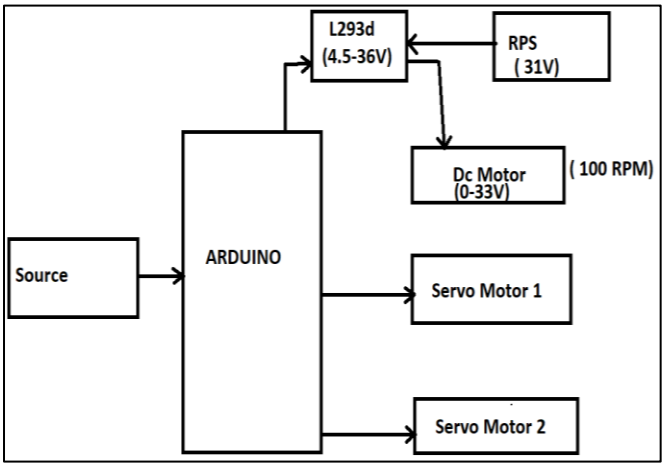

Fig. 2:

V. TORQUE EQUATION

The equation for torque developed in a DC motor can be derived as follows:
The force on one coil of wire

$$F = I \times l \times B, \quad (1)$$

Torque equation;

$$T = K\ Ia \quad (2)$$

VI. SPEED OF A DC MOTOR

For the motor the induced emf is;

$$E\ ZNP\ A = \varphi\ 60\ \text{Volt} \quad (3)$$

Induced emf also known as back emf and can be written as;

$$Eb = V - Ia\ Ra \quad (4)$$

So the speed of a dc motor can be control by using above equations;

$$\omega\ \varphi = E\ La\ \text{Rad /sec} \quad (5)$$

$$\omega\ \varphi = V\ I - R\ K\ a\ a\ a\ \text{Rad/sec} \quad (6)$$

All rights reserved by www.journal4research.org

The speed of a DC motor can be control either control the armature voltage or by varying field flux.

VII. CONTROL SYSTEM

Modern and advance technologies are increasing day by day, demanding process and control automation in all sectors. Automation results into better quality, increases production and reducing costs. The variable speed drives, which can control the speed of A.C./D.C. motors, are indispensable controlling elements in automation systems. Depending on the applications, some of them are fixed speed and some of the variable speed drives. In electrical system the speed of D/C motor can be controlled by using modern power electronics applications. The variable speed drives, till a couple of decades back, have various limitations, such as poor efficiencies, larger space, lower speeds, etc. However, the power electronic devices such as SCR, MOSFETs, IGBTs etc., with the microcontrollers have variable speed drive systems which are not only in the smaller in size but also very efficient, highly reliable and meeting all the stringent demands of various industries. Pulse width modulation is a method for binary signals generation, which has two signal periods high and low. The width of each pulse varies between 0 and the time period T. The main principle is control of power by varying the duty cycle. Here the conduction time of the load is controlled. Pulse width modulation speed control works by driving the motor with a series of "ON-OFF" pulses and varying the duty cycle, the fraction of time that the output voltage is "ON" compared to when it is "OFF", of the pulses while keeping the frequency constant. The waveform of the pulse width modulation shows in fig: The wave form of the pulse width modulation As the microcontroller concerned the ports of the controller are not very sufficient to drive DC motor so, there is a requirement of a 'Driver'. The DC Motors require more current then the microcontroller pin can typically generate. For this it require switches such as (Transistors, MOSFET, Relay etc.) which can accept a small current, amplify this and generate a larger current, which further drives a motor. This entire process has done by what is known as a motor driver. It is basically a current amplifier which takes a low-current signal from the microcontroller and gives out a proportionally higher current signal which can control and drive a motor. In most cases, a transistor can act as a switch and perform this task which drives the motor in a single direction. A microcontroller is a small computer on a single integrated circuit containing a processor core, memory, and programmable input/output peripherals. Advantages of Microcontroller Microcontrollers are widely used in control system due to the following reasons:

- Design and Simulation
- Flexibility
- High Integration
- Easy to Use and
- Cost.

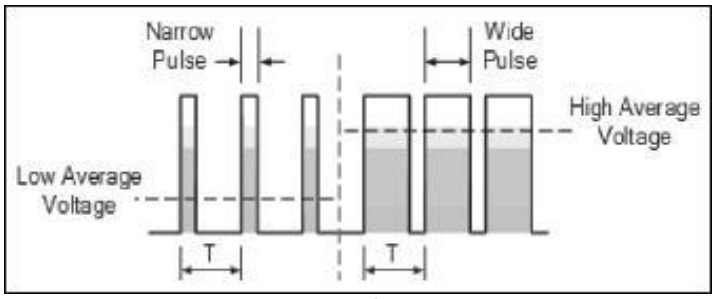

Fig. 3:

VIII. TESTING & RESULT

The results has tested and performed using a golf ball as a prototype dimpled ball and the basic speed measuring formula, with the distance being constant and the voltage being supplied to the motors being varied. 10 feet pitch has been taken as an analogy for this purpose. Table 1 show the results.

Table - 1

S. No	*DC Voltage (Volts)*	*Speed of Ball (kmph)*
1	***3v***	***65***
2	***6v***	***78***
3	***9v***	***96***
4	***12v***	***109***

IX. ADVANTAGES OF THE ARM

Reduced helper requirement, Compact size, Low cost, Batsman can adjust the machine as per the equipment, it can delivered at various different speeds by using pulse width modulation, speed accuracy is better

All rights reserved by *www.journal4research.org*

X. FUTURE WORKS

Use of infrared sensors for delivering balls automatically. Spin and swing application by varying the speed of both the motors at different times. Alarm system Voice control for delivering balls at the will of batsman, using voice command. Accuracy and Reliability and high speed control without any vibrations.

XI. CONCLUSION

In this paper an automatic bowling machine has been designed. The batsman can practice by adjusting the bowling machine as per his/her requirement. The pulse width modulation used to controlling the speed of the dc motor. For 3 V, 6 V, 9 V and 12 V dc supply, it gives the speed from 65 Km/hr to 110 Km/ hr.

REFERENCES

[1] L. Justham and A. West, "Design and development of a novel, integrated bowling machine for cricket", Proc. IMechE Part P: J. Sports Engineering and Technology, vol. 223, pp. 125-137, June 2009.
[2] Abhijit Mahapatra, Avik Chatterjee and Shibendu Shekhar Roy' "Modeling and simulation of a ball throwing machine", 14th National Conference on Machines and Mechanisms (NaCoMM09), NIT, Durgapur, India, pp. 416-422, December 17-18, 2009.
[3] S.S. Roy, S. Karmakar, N.P. Mukherjee, U. Nandy and Uma Datta, "Design and development of indigenous cricket bowling machine", Journal of Scientific & Industrial Research, Vol. 65, pp 148-152, February 2006.
[4] Akshay R. Varhade, HrushikeshV Tiwari and Pratik D. Patangrao, "Cricket Bowling Machine", International Journal of Engineering Research & Technology (IJERT), ISSN: 2278-0181 vol. 2 Issue 12, pp. 1920-1924, December 2013.
[5] P.R. Upadhyay, K.R. Rajgopal and B.P. Singh, "Design of a compact winding for an axial flux permanent magnet brushless DC motor used in an electric two wheeler", IEEE, Transactions on Magnetics, Vol. 40, Issue 4, pp. 2026-2028, July 2004.
[6] T. Seng, King-Jet and G.H. Chen, "Computer aided design and analysis of direct driven wheel motor drive", IEEE, Transactions on Power Electronics, Vol. 12, Issue 3, pp. 517-527, May 1997.
[7] Bola, Cricket Bowling Machine, 2006 available at http:// www. bola.co.uk
[8] Raza Ali, Diegel Olaf and Arif Khalid Mahmood "Robowler: design and development of a cricket bowling machine ensuring ball seam position", Central South University Press and SpringerVerlag Berlin Heidelberg, Vol. 21, pp. 4142−4149, 2014.
[9] Rene´ E.D. Ferdinands, Uwe G. Kersting and Robert N. Marshall, "A new taxonomic system for the sub-classification of cricket bowling actions", Sports Technology, pp. 1-13, 2014.
[10] Paul S. Glazier and Jonathan S. Wheat, "An integrated approach to the biomechanics and motor control of cricket fast bowling techniques", Springer International Publishing, Switzerland, 2013.
[11] Wang Yong, Zhou Wen-Wei, Yu Li and Yang Xi-Yin, "Research on the precise control method based on the new style PWM with variable pulse width", IEEE, International Conference on Embedded Software and Systems (ICESS), pp. 288-495, 2008.
[12] Zhu Haishui, Wang Dahu, Zhang Tong and Huang Keming, "Design on a dc motor speed control", IEEE, International Conference on Intelligent Computation Technology and Automation, pp. 59-63, 2010.
[13] A. Gung, IGAP Raka, S. Huda and I WA Wijaya, "Speed control of DC motor with pulse width modulation (PWM) method using infrared remote control based on AT mega 16-Microcontroller", IEEE, International Conference on Smart Grid Technology in Electrical and Information System (ICSGTEIS), pp. 108-112, 5-7 Nov. 2014.
[14] Valery D. Yurkevich and Nikita A. Stepanov, "PWM speed control of dc motor based on singular perturbation technique", IEEE, 6th International Congress on Ultra-Modern Telecommunications and Control Systems and Workshops (ICUMT), pp. 434-440, 2014.
[15] Y.S. Ali, S.B.M. Noor, S.M. Uashi and M.K Hassan, "Microcontroller performance for DC motor speed control system", IEEE, National Power and Energy Conference (PECon), Bangi, Malaysia, pp. 104-109, 2003.
[16] Md Mustafa Kamal, Lini Mathew and S. Chatterji, "Speed control of brushless DC motor using intelligent controllers", IEEE, 2014.
[17] A. Tashakori and M. Ektesabi, "Stability analysis of sensor less BLDC motor drive using digital PWM technique for electric vehicles", IEEE, pp. 4898-4903, 2012
[18] P.S. Bhimra, "Electrical machinery", Khanna Publication of India, 3rd Edition 2003.
[19] M.H. Rashid, Power electronics: circuits, devices & applications, Prentice Hall of India Ltd. 3rd Edition, 2004.
[20] Carmadi Machbub, Ary Setijadi Prihatmanto and Yoseph Dwi Cahaya, "Design and implementation of adaptive neural networks algorithm for DC motor speed control system using simple microcontroller", pp. 479-483, IEEE, 2001
[21] S.D. Barman, A. Hussain and T. Ahmed, "Speed control of DC motor using PWM technique: Pulse Width Modulated DC Motor Control, LAP Lambert Academic Publishing, 2012.
[22] Mohamed Y. Tarnini, "Microcontroller based PMDC motor control for driving 0.5kw scooter", IEEE, 16th International Power Electronics and Motion Control Conference and Exposition Antalya, Turkey, pp. 1204-1208, 21-24 Sept. 2014.
[23] G. Rajeshkanna, "Modern speed control of separately excited dc motor by boost converter fed field control method", IEEE, International Conference on Computer Communication and Informatics (ICCCI), Coimbatore, India, Jan. 09 – 11, 2013.
[24] J. Nicolai and T. Castagnet, "A flexible microcontroller based chopper driving a permanent magnet DC motor", The European Power Electronics Association, pp. 200-203, 1993.
[25] C.J. Baker, "A calculation of cricket ball trajectories", Proc. I IMechE Part C: J. Mechanical Engineering Science, vol. 224, pp. 1947-1958, November 2009.

All rights reserved by *www.journal4research.org*